Steel laminae couplings

Types and operating description 170

RADEX®-N
General information and hub types 172
Types and applications 173
Technical data 174
Standard types 176
Customised types 178
Corrosion-resistant type for large shaft distances 179
Standard series NANA 3 for pump drives in accordance with API 610 180

RIGIFLEX®-N
General information and hub types 182
Technical data 183
Type A 185
Type A-J 186
Type A-H 187

RADEX®-N



RIGIFLEX®-N



Properties of laminae couplings

		
Product	**RADEX®-N**	**RIGIFLEX®-N**
Type	Steel laminae coupling	
Features		
Torsionally stiff	●	●
Backlash-free	●	●
Maintenance-free	●	●
Compensating for misalignment	●	●
Special features		
Stock programme	Basic programme available from stock, customised solutions available	Basic programme available from stock, customised solutions available
Applications / core industries	Pumps, compressors, fans	Pumps, compressors, fans
API	610	610 & 671
Performance data		
Max. rated torque T_{KN} [Nm]	280,000	280,000
Max. speed n [rpm]	20,000	23,000
Max. operating temperature T [°C]	280	280
Standard materials		
Hubs		
Steel (S355J2)	●	●
Q & T steel (C45N)	●	●
Q & T steel (42CrMo4V)		
Q & T steel (30CrNiMo8)		
Spacers		
Steel (S355J2)	●	●
Q & T steel (C45N)	●	●
Q & T steel (42CrMo4V)	with torsion shafts	
Q & T steel (30CrNiMo8)	with torsion shafts	
Special materials (corrosion-resistant)		
Hubs		
Steel (1.4305)	●	○
Steel (1.4404)	●	
Spacers		
Steel (1.4305)	●	
Steel (1.4404)	●	○
Spacer made of Composite GRP (fibre glass)	●	
Spacer made of Composite CFRP (carbon fibre)	●	
Surface coating	Painting, phosphating, zinc-coating and passivating, Geomet, Tenifer Q	Painting, phosphating, zinc-coating and passivating, Geomet, Tenifer Q

● ≈ Standard
○ ≈ On request

STEEL LAMINAE COUPLINGS
TYPES AND OPERATING DESCRIPTION

Product finder of laminae couplings

		
Product	**RADEX®-N**	**RIGIFLEX®-N**
Type	Steel laminae coupling	
Geometries		
Design	Single- and double-cardanic	double-cardanic
Max. shaft diameter [mm]	330	400
Radial assembly	●	●
Certifications/type examinations		
ATEX	●	●
GOST R/ GOST TR	●	●
DNV GL	●	●
ABS	●	●
LR	●	●

● ≈ Standard

Details on laminae couplings

Laminas - laminae shape optimized by FEM

The steel laminae sets made of high-strength, stainless spring steel were developed based on FEM calculations. Considering the necessary options of displacement of the coupling, the optimum shape with regard to torque transmission and torsional stiffness was aimed at. The waisted shape of the steel laminas on the outside diameter resulted from this optimization calculation.

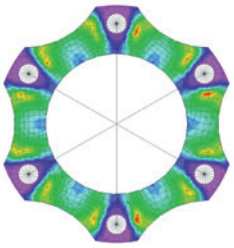

RADEX®-N - laminae sets with dowel screws

The core of the steel laminae coupling are the laminae sets and their connection to hubs resp. spacers. High-strength special dowel screws that are alternately screwed to hubs and spacer allow for a combination of friction fit and positive locking fit. Thus a high power density with simultaneous ease of displacement and low restoring forces is ensured.

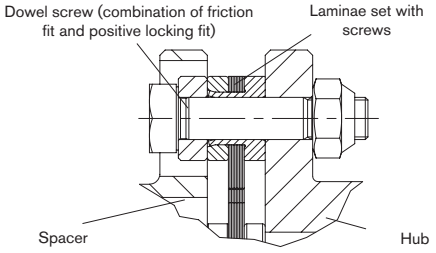

RIGIFLEX®-N - protecting the spacer

Since our main idea with the development of RIGIFLEX®-N was to comply with the standards of API 610 and API 671, the spacer is secured by a safety catch, too. In case if the laminas break the spacer remains inside the coupling.
In general the spacer is supplied along with laminae sets pre-assembled by the manufacturer. These are connected with the spacers resp. flanges fully free from backlash via positive-locking special pins.

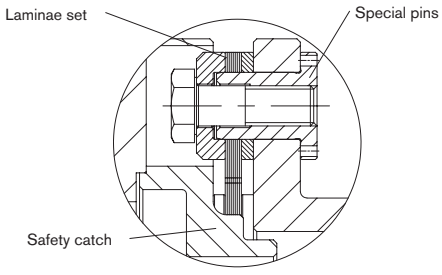

Components

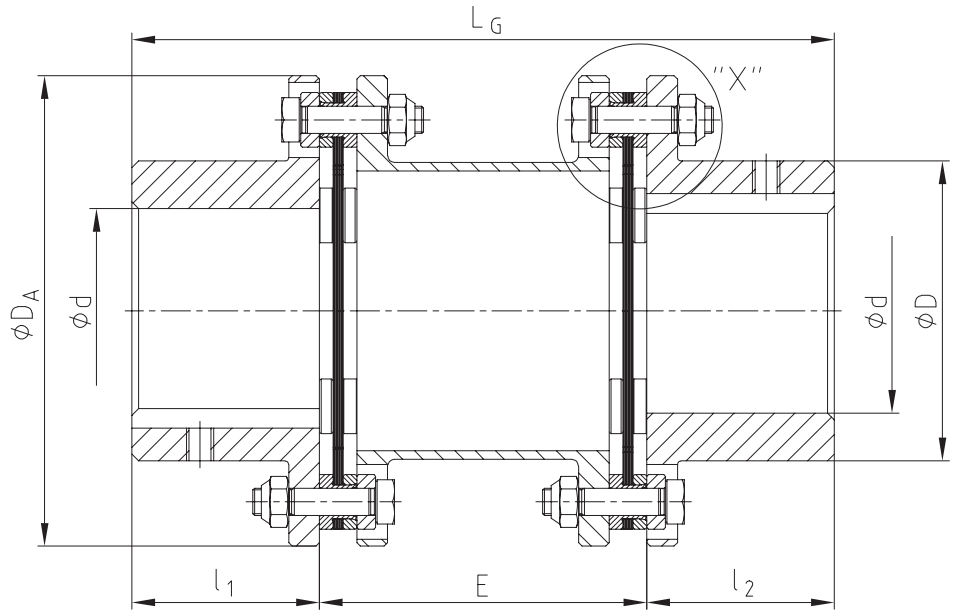

Dismounting dimension E = DBSE (shaft distance dimension)

Detail “X”

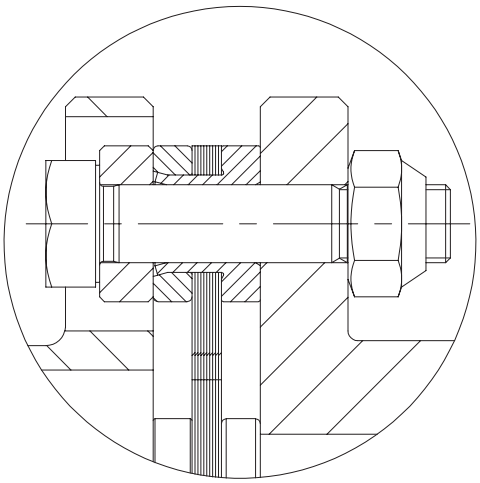

Safety catch of the spacer:
The laminae sets are provided with a sleeve in order to secure the spacer in case if the laminas break.

General advice

Advice on assembly and operation

See our mounting instructions KTR standard 47410 at www.ktr.com. With the assembly it is important to make sure that the laminae sets are assembled free from distortion in axial direction.
If the finish bore is machined by the customer, the tolerances for concentricity and axial run-out must be observed (see illustrations below).

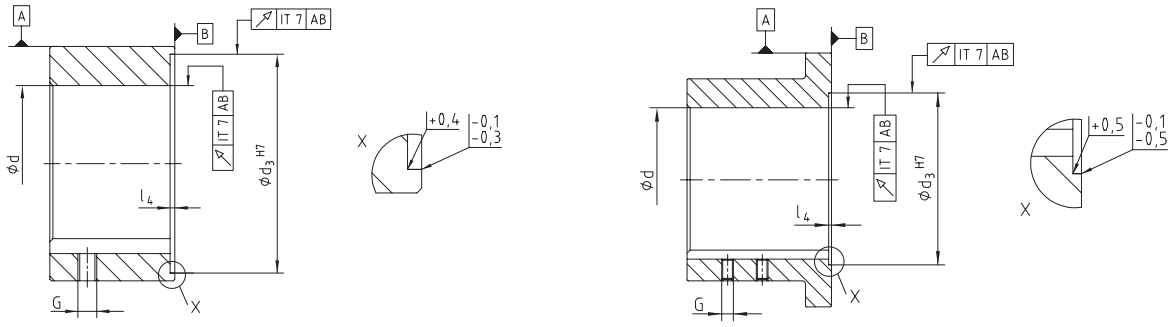

Installation

RIGIFLEX®-N couplings are designed for horizontal installation. With vertical installation the spacer must be supported, if necessary. Please consult with us.

Delivery condition

RIGIFLEX®-N-couplings are supplied as individual components (assembled on request), with the subassembly of spacers (flanges, laminae sets and spacer) being fully assembled. The hubs can be supplied unbored or with finish bore and feather keyway or with a frictionally engaged shaft-hub-connection. The shaft-hub-connection needs to be inspected by the customer (consult with KTR, if necessary).

Balancing

On request of the customer the RIGIFLEX®-N couplings can be balanced. Please consult with us, if necessary.

Safety regulations

The coupling must be dimensioned in that the permissible coupling load is not exceeded during any operating condition. For this purpose the actual loads must be compared to the permissible coupling parameters. The customer must protect rotating parts from accidental contact (Safety of Machinery DIN EN 292 chapter 2). Take precautions to make sure there is sufficient coupling protection in case of fracture of the coupling caused by overload.

Types of hubs

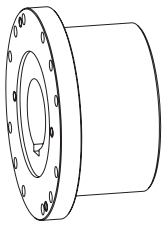

Type 1.0 hub with feather keyway and setscrew

Positive-locking torque transmission, permissible torque depending on the permissible surface pressure.

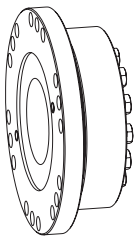

Type with KTR 620 or 603 clamping set

Frictionally engaged torque transmission with external clamping set KTR 620 or KTR 603. Transmittable torques depending on bore diameter.

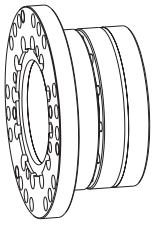

Type 6.0 and 6.5 hub

Integrated frictionally engaged shaft-hub-connection. Transmittable torques depending on bore diameter. Suitable for high speeds.

Technical data

The following laminae types are to be distinguished with RIGIFLEX®-N:

Size 35 – 65 (laminae with 4 holes)

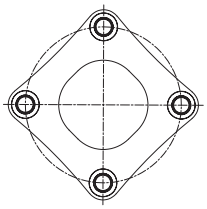

Size 75 – 160 (laminae with 6 holes)

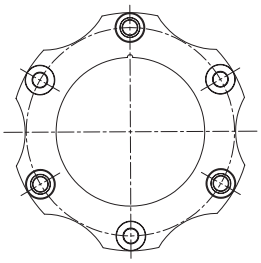

Size 166 – 406 (laminae with 6 holes)

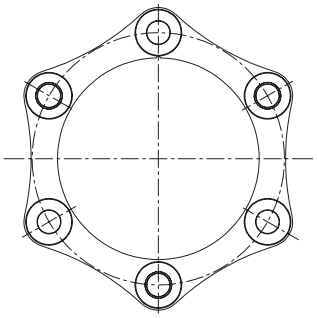

Size 168 – 408 (laminae with 8 holes)

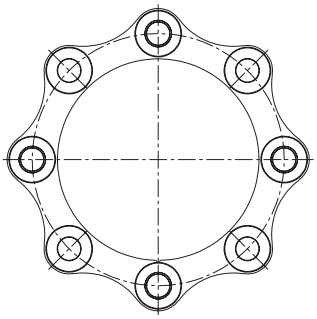

Torques and displacements

Size	Lamina type	Torques [Nm]			Perm. displacements						
		T_{KN}	$T_{K\,max}$	T_{KW}	Angular displacement $\pm K_w$ [1] [°]	Axial displacement $\pm K_a$ [mm]	Radial $\pm K_r$ [mm]				
							DBSE = 100	DBSE = 140	DBSE = 180	DBSE = 200	DBSE = 250
35		130	260	65	0.7	1.2	0.90	1.40	–	–	–
50	laminae with 4 holes	270	540	135	0.7	1.4	0.77	1.26	–	–	–
65		550	1100	275	0.7	1.5	0.75	1.23	1.72	–	–
75		1100	2200	550	0.7	1.8	0.73	1.22	1.71	–	–
85		1900	3800	950	0.7	2.1	–	1.14	1.62	1.87	2.48
110		3500	7000	1750	0.7	2.4	–	1.05	1.54	1.78	2.39
120		5750	11500	2875	0.7	2.6	–	1.00	1.49	1.73	2.35
140		10500	21000	5250	0.7	3.3	–	–	–	1.55	2.16
160		16000	32000	8000	0.7	3.8	–	–	–	–	1.99
166	laminae with 6 holes	19000	38000	9500	0.7	3.7					
196		22500	45000	11250	0.7	4.2					
216		32000	64000	16000	0.7	4.5					
256		52500	105000	26250	0.7	5.2					
306		86000	172000	43000	0.7	6.0					
346		135000	270000	67500	0.7	6.7					
406		210000	420000	105000	0.7	7.5	depending on DBSE				
168		25000	50000	12500	0.5	2.6					
198		30000	60000	15000	0.5	2.8					
218		42500	85000	21500	0.5	3.0					
258	laminae with 8 holes	70000	140000	35000	0.5	3.5					
308		115000	230000	57500	0.5	4.0					
348		180000	360000	90000	0.5	4.5					
408		280000	560000	140000	0.5	5.0					

[1] Angular displacement each laminae set

If axial, angular and radial shaft displacement arises in parallel observe the following table:

Size	Permissible angular displacement							
	0	0.1	0.2	0.3	0.4	0.5	0.6	0.7
	Permissible axial displacement							
35	1.20	1.00	0.85	0.74	0.60	0.40	0.20	0.00
50	1.40	1.20	1.00	0.80	0.60	0.40	0.20	0.00
65	1.50	1.29	1.07	0.86	0.64	0.43	0.22	0.00
75	1.80	1.54	1.29	1.03	0.77	0.52	0.26	0.00
85	2.10	1.80	1.50	1.20	0.90	0.60	0.30	0.00
110	2.40	2.06	1.71	1.37	1.03	0.69	0.34	0.00
120	2.60	2.23	1.86	1.48	1.11	0.74	0.37	0.00
140	3.30	2.83	2.36	1.88	1.41	0.94	0.47	0.00
160	3.80	3.26	2.71	2.17	1.63	1.09	0.54	0.00
166	3.70	3.17	2.64	2.12	1.59	1.06	0.53	0.00
196	4.20	3.60	3.00	2.40	1.80	1.20	0.60	0.00
216	4.50	3.86	3.21	2.57	1.93	1.29	0.64	0.00
256	5.20	4.46	3.71	2.97	2.23	1.49	0.74	0.00
306	6.00	5.14	4.29	3.43	2.57	1.72	0.86	0.00
346	6.75	5.79	4.82	3.86	2.89	1.93	0.96	0.00
406	7.50	6.43	5.36	4.28	3.21	2.14	1.07	0.00
168	2.60	2.08	1.56	1.04	0.52	0.00	–	–
198	2.80	2.24	1.68	1.12	0.56	0.00	–	–
218	3.00	2.40	1.80	1.20	0.60	0.00	–	–
258	3.50	2.80	2.10	1.40	0.70	0.00	–	–
308	4.00	3.20	2.40	1.60	0.80	0.00	–	–
348	4.50	3.60	2.70	1.80	0.90	0.00	–	–
408	5.00	4.00	3.00	2.00	1.00	0.00	–	–

Technical data

Permissible speeds and stiffness figures								
Size	Max. speed [rpm]	per laminae set		ct [Nm/rad] for complete coupling with mounting length E				
		cw [Nm/rad]	ct x 10^6 [Nm/rad]	DBSE = 100	DBSE = 140	DBSE = 180	DBSE = 200	DBSE = 250
35	23000	170	0.056	65020	56700	–	–	–
50	18000	490	0.27	73953	63990	–	–	–
65	13600	260	0.5	146022	129938	117046	–	–
75	12400	1000	0.67	306145	278381	255234	–	–
85	11000	1500	0.9	–	406641	369429	353265	318433
110	9000	1500	1.5	–	664284	637587	625028	595693
120	8000	3000	2.0	–	1798018	1637553	1567602	1416348
140	6400	10000	3.5	–	–	–	2363340	2226630
160	5600	10350	6.9	–	–	–	–	2654894
166	5600	26800	13.0					
196	5200	35800	17.0					
216	4600	41500	19.0					
256	3900	65000	31.0					
306	3300	112000	55.0					
346	2900	205000	79.0					
406	2500	276000	125.0	DBSE as specified by the customer				
168	5600	44300	20.0					
198	5200	82200	26.0					
218	4600	90000	30.0					
258	3900	138000	49.0					
308	3300	234000	83.0					
348	2900	416000	125.0					
408	2500	562000	200.0					

cw = angular stiffness
ct = torsion spring stiffness

Weights and mass moments of inertia												
Size	Hub (max. bore)		Spacer complete [kg]					Spacer complete [kgm²]				
	[kg]	[kgm²]	DBSE = 100	DBSE = 140	DBSE = 180	DBSE = 200	DBSE = 250	DBSE = 100	DBSE = 140	DBSE = 180	DBSE = 200	DBSE = 250
35	0.60	0.0007	1.030	1.120	–	–	–	0.00040	0.00050	–	–	–
50	0.92	0.001019	2.262	2.442	–	–	–	0.00256	0.00263	–	–	–
65	2.7	0.00541	3.922	4.183	4.445	–	–	0.00810	0.00830	0.00828	–	–
75	2.4	0.00566	4.482	4.842	5.202	–	–	0.01143	0.01191	0.01239	–	–
85	3.7	0.01135	–	7.154	7.548	7.746	8.239	–	0.02364	0.02427	0.02459	0.02538
110	6.7	0.03222	–	12.492	13.478	13.972	15.205	–	0.06291	0.06540	0.06665	0.06976
120	9.2	0.05238	–	–	17.324	17.842	19.137	–	–	0.10314	0.10458	0.10818
140	18.2	0.15175	–	–	–	32.530	34.325	–	–	–	0.31901	0.32845
160	29.9	0.33890	–	–	–	–	52.458	–	–	–	–	0.68640
166	28.0	0.32										
196	37.0	0.554										
216	50.0	0.85										
256	95.0	2.35										
306	138.0	4.55										
346	215.0	9.75										
406	310.0	18.95	DBSE as specified by the customer									
168	30.0	0.33										
198	40.0	0.56										
218	52.0	0.88										
258	99.0	2.43										
308	142.0	4.78										
348	222.0	9.83										
408	325.0	19.22										

Standard type A

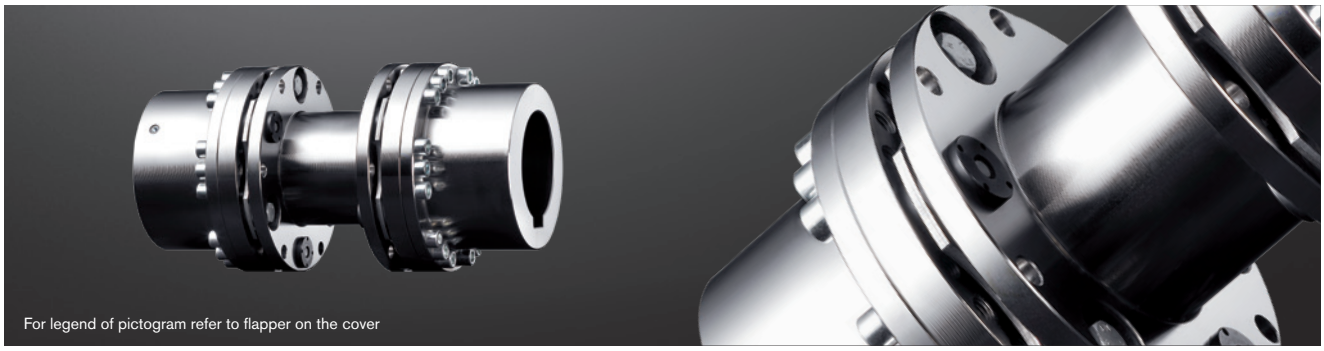

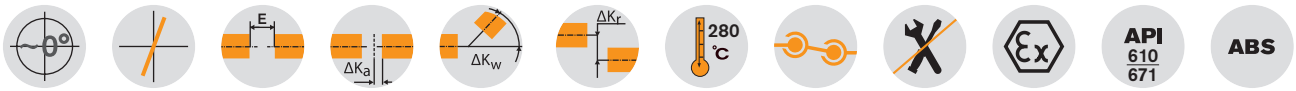

Components

Size 35

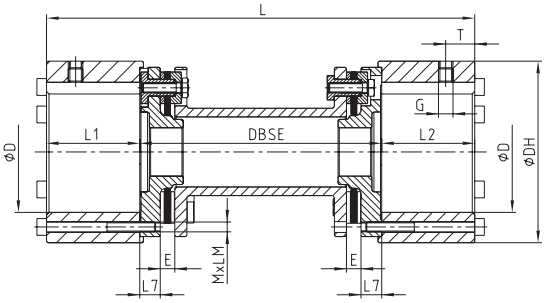

Size 50 - 408

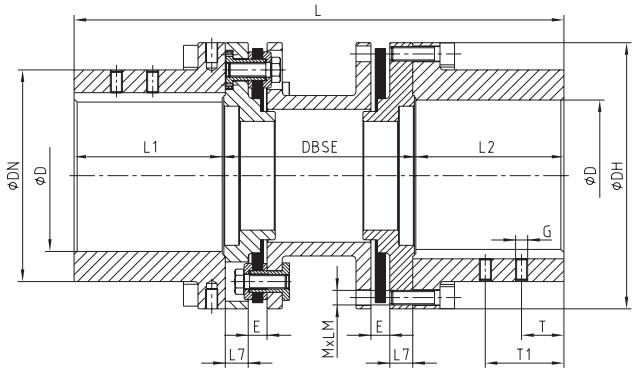

RIGIFLEX®-N type A																			
Size	Torques [Nm]			Max. finish bore	Dimensions [mm]													Screws DIN EN ISO 4762	
	T_{KN}	$T_{K\,max}$	T_{KW}	d_1, d_2	D	D_A	l_1, l_2	l3	G	t1	t2	E_1	DBSE [1]					Mxl	T_A [Nm]
35	130	260	65	50	–	75	38.5	8.5	M 6	15	–	6	100	140	–	–	–	M4x45	4.1
50	270	540	135	50	70	95	50	12	M 6	10	–	9	100	140	–	–	–	M6x22	14
65	550	1100	275	70	100	126	63	12	M 8	20	–	11	100	140	180	–	–	M6x25	14
75	1100	2200	550	75	105	138	62.5	12	M 8	20	–	11	100	140	180	–	–	M8x30	35
85	1900	3800	950	90	120	156	72.5	15	M 10	20	–	12	–	140	180	200	250	M8x30	35
110	3500	7000	1750	110	152	191	87	18	M 10	25	–	12	–	140	180	200	250	M10x35	69
120	5750	11500	2875	120	165	213	102	20	M 12	25	–	12	–	–	180	200	250	M12x40	120
140	10500	21000	5250	150	200	265	126	25	M 12	30	–	15	–	–	–	200	250	M16x50	295
160	16000	32000	8000	165	230	305	145	31	M 12	30	–	15	–	–	–	–	250	M16x55	295
166	19000	38000	9500	165	230	305	155	31	M 16	30	70	17						M20x50	560
196	22500	45000	11250	195	260	330	185	32	M 16	40	90	24						M20x50	560
216	32000	64000	16000	210	285	370	205	32	M 20	50	110	26						M20x65	560
256	52500	105000	26250	260	350	440	245	38	M 20	70	130	31						M24x80	970
306	86000	172000	43000	305	400	515	295	43	M 24	70	130	36						M27x100	1450
346	135000	270000	67500	350	460	590	335	55	M 24	95	175	45						M30x110	1950
406	210000	420000	105000	405	530	675	395	58.5	M 24	95	175	50	According to customer specification					M36x130	3300
168	25000	50000	12500	165	230	305	155	31	M 16	30	70	17						M20x50	560
198	30000	60000	15000	195	260	330	185	32	M 16	40	90	24						M20x50	560
218	42500	85000	21500	210	285	370	205	32	M 20	50	110	26						M20x65	560
258	70000	140000	35000	260	350	440	245	38	M 20	70	130	31						M24x80	970
308	115000	230000	57500	305	400	515	295	43	M 24	70	130	36						M27x100	1450
348	180000	360000	90000	350	460	590	335	55	M 24	95	175	45						M30x110	1950
408	280000	560000	140000	405	530	675	395	58.5	M 24	95	175	50						M36x130	3300

[1] Other shaft distance dimensions available on request.
For selection of coupling see page 18 et seqq. Assembly instructions of KTR standard 47410 available at www.ktr.com.

Ordering example:

RIGIFLEX®-N 120	A	Ø 100	Ø 120	200
Coupling size	Type	Bore d_1	Bore d_2	DBSE

RIGIFLEX®-N
Steel laminae couplings

Standard type A-J

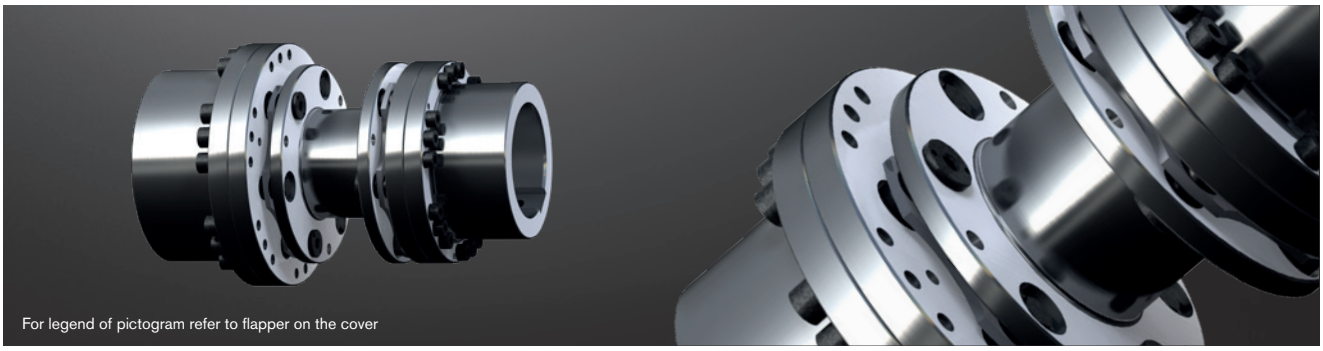



Components

Size 50 - 140

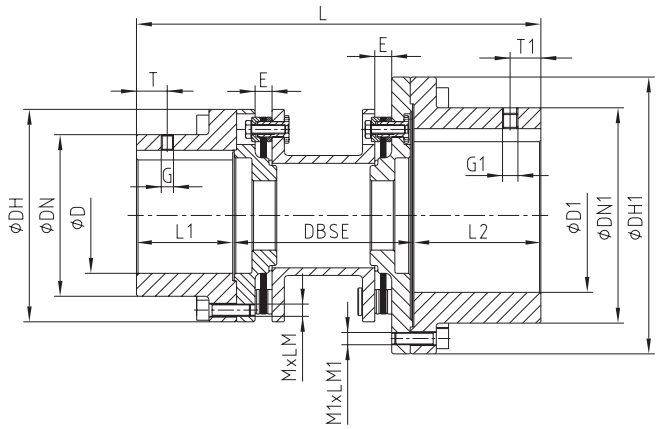

RIGIFLEX®-N type A-J																									
Size	Torques [Nm]			Max. finish bore		Dimensions [mm]																Screws DIN EN ISO 4762			
	T_{KN}	$T_{K\,max}$	T_{KW}	d_1	d_J	D	D_A	l1	D_J	D_{AJ}	l_J	G_1	t1	G_J	t_J	E_1	DBSE [1]					M 1	T_A [Nm]	M_J	T_{AJ} [Nm]
50	270	540	135	50	70	70	95	50	100	126	63	M 6	10	M 8	20	9	100	140	–	–	–	M 6	14	M 6	14
65	550	1100	275	70	90	100	126	63	120	156	72.5	M 8	20	M 10	20	11	100	140	180	–	–	M 6	14	M 8	35
75	1100	2200	550	75	100	105	138	62.5	140	180	83	M 8	20	M 10	20	11	100	140	180	–	–	M 8	35	M 8	35
85	1900	3800	950	90	110	120	156	72.5	152	191	87.5	M 10	20	M 10	25	12	–	140	180	200	250	M 8	35	M 10	69
110	3500	7000	1750	110	150	152	191	87	200	265	127	M 10	25	M 12	30	12	–	140	180	200	250	M 10	69	M 16	295
120	5750	11500	2875	120	165	165	213	102	230	305	147	M 12	25	M 12	30	12	–	–	180	200	250	M 12	120	M 16	295
140	10500	21000	5250	150	195	200	265	126	260	330	186	M 12	30	M 16	40/90	15	–	–	–	200	250	M 16	295	M 20	560
160	16000	32000	8000	165	210	230	305	145	285	370	205	M 12	30	M 20	50/60	15	–	–	–	200	250	M 16	295	M 20	560

[1] Other shaft distance dimensions available on request.
For selection of coupling see page 18 et seqq. Assembly instructions of KTR standard 47410 available at www.ktr.com.

Other types:

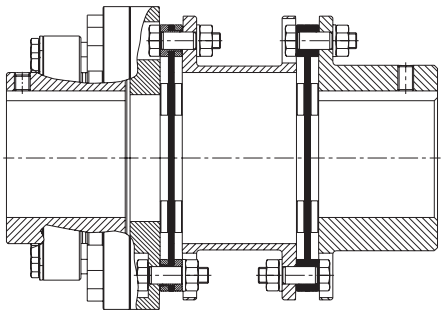

For RADEX®-N with integrated slipping unit
see dimension sheet 699206

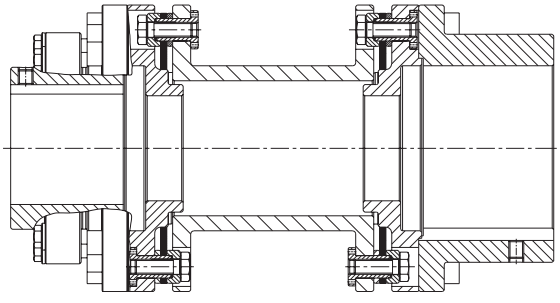

For RIGIFLEX®-N with integrated slipping unit
see dimension sheet 698869

Ordering example:

RIGIFLEX®-N 85	A-J	Ø 80	Ø 120	200
Coupling size	Type	Bore d_1	Bore d_J	DBSE

Standard type A-H

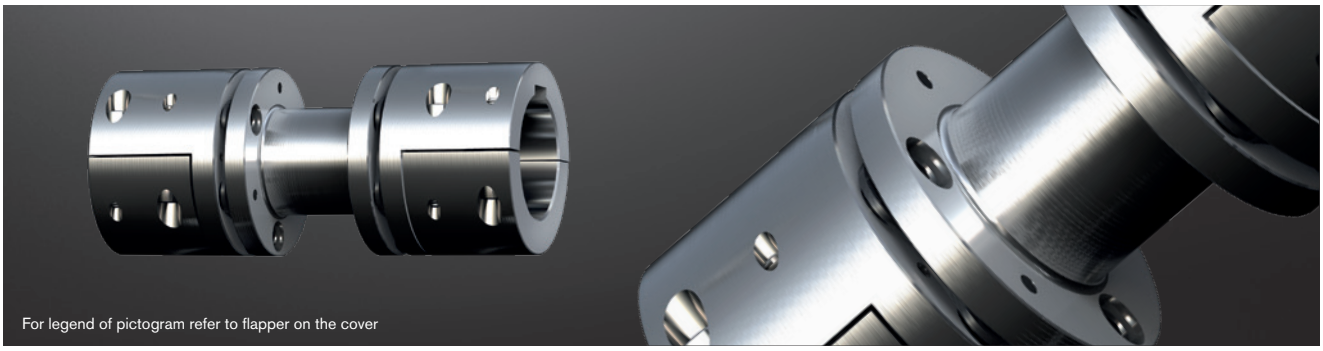

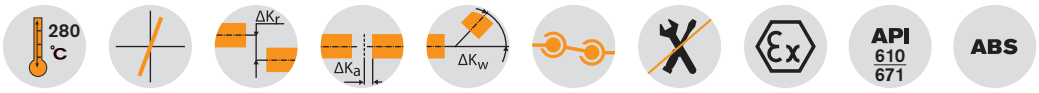

Components

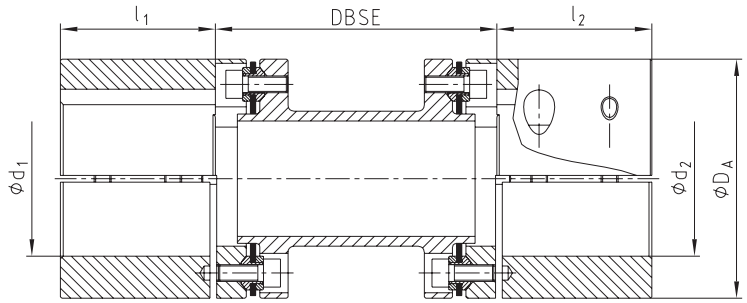

RIGIFLEX®-N type A-H											
Size	Torques [Nm]		Max. finish bore [mm]	Dimensions [mm]							
	T_{KN}	$T_{K\,max}$	d_1, d_2	D_A	l_1, l_2	Standard shaft distance dimension DBSE [1]				Perm. axial displacement	Perm. angular displacement (per laminae set [°])
46	90	180	42	69	45					+/- 1.4	1.0
56	255	510	55	85	55	100				+/- 1.2	0.7
66	450	900	65	105	65		140	180	250	+/- 1.6	0.7
76	975	1950	75	124	75					+/- 1.8	0.7
86	1500	3000	85	145	85	-				+/- 2.2	0.7
106	2400	4800	105	168	105		-			+/- 2.4	0.7

[1] Other shaft distance dimensions (DBSE) available on request

Benefits of type A-H:

- Hub type 7.6 - half shell hub
- Easy and quick radial assembly and disassembly
- Type according to API 610 and 671 (see exceptions)
- Drop-out protection of spacer with fracture of laminas following API 671

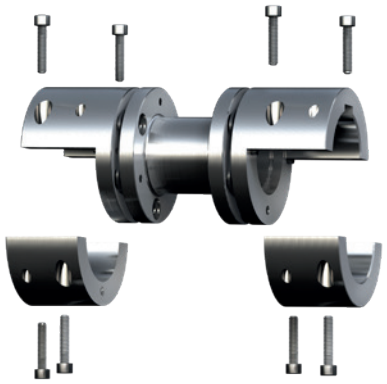

Ordering example:

RIGIFLEX®-N 66	A-H	Ø 42	Ø 48	140
Coupling size	Type	Bore d_1	Bore d_2	Shaft distance dimension DBSE