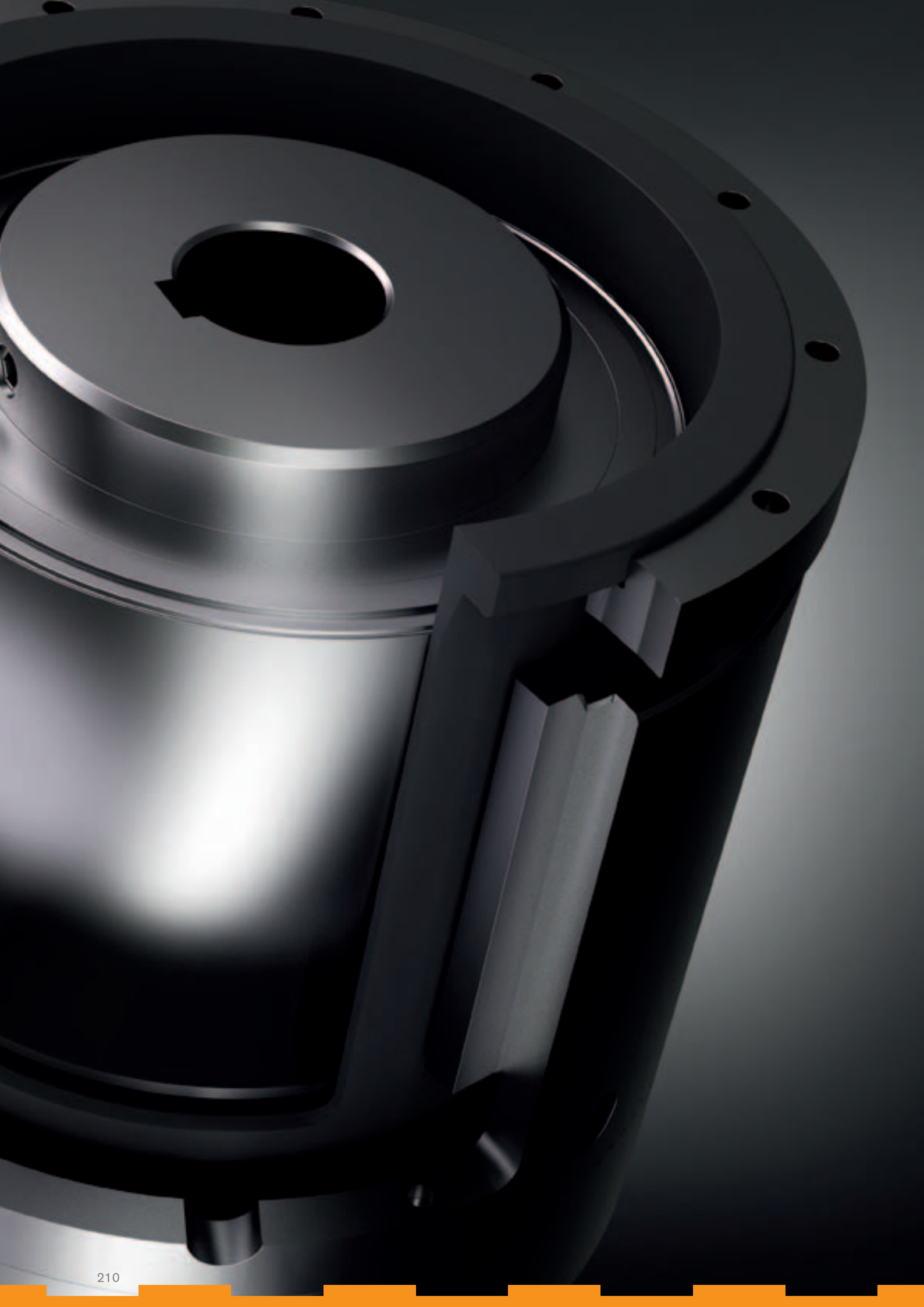

# Magnetic couplings


Types and operating description 212

**MINEX®-S**
Containment shroud – material stainless steel 214
Containment shroud – material Hastelloy 216
Containment shroud – material PEEK 218
Containment shroud – material oxide ceramics 220
Conversion kits and customized component assemblies 222
Other types 223


**MINEX®-S**

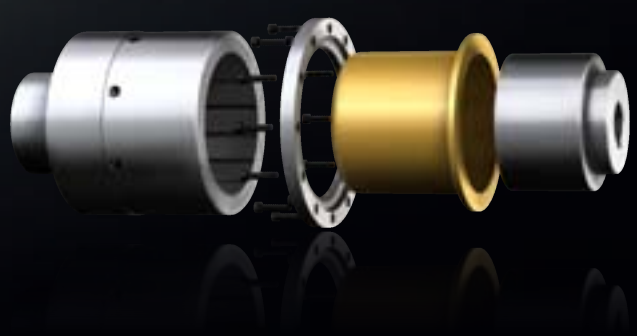

# MAGNETIC COUPLINGS
# TYPES AND OPERATING DESCRIPTION

## General information

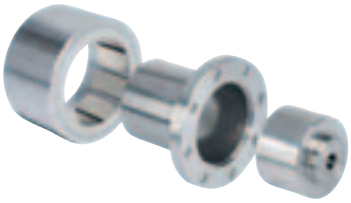

### General description

MINEX®-S magnetic couplings transmit the torque without contact through magnetic forces between the internal and external rotor. They ensure a hermetic seperation between driving and driven side in pumps and mixers sealing critical liquids and gases reliably. As a result they prevent serious leakages operating as a reliable alternative to usual dynamic shaft seals.

Internal rotor

External rotor

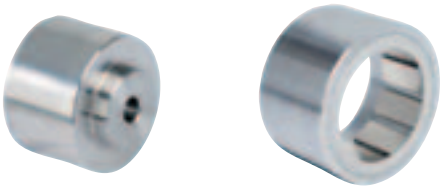

Run of flux lines

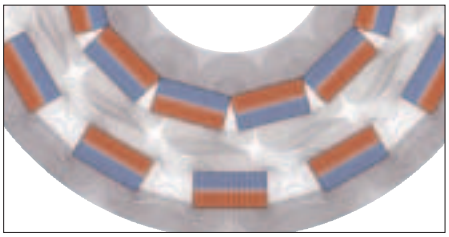

### Operation/structure

The coupling consists of an external and an internal rotor. The external rotor has high-quality, permanent magnets of changing polarity on the inner side and the internal rotor has them on the outside.
The external rotor is normally fixed on the drive side and the magnets are glued in the keyways. The magnets of the driven-sided internal rotor are completely encapsulated.

### Torque transmission

In their non-operative states the north and south poles of the rotors are opposite to each other and the magnetic field is completely symmetric. It is only when the rotors are twisted that the magnetic field lines are moved, hence the torque is transmitted through the air gap. Then there is a synchronous operation under a constant torsion angle.
If the maximum coupling torque and the maximum torsion angle are exceeded, the power transmission is interrupted.

Containment shroud



### Sealing function

The containment shroud that is fixed to the housing separates internal and external rotor from each other.
It ensures a completely leak-proof separation of product and atmosphere.
The sealing is achieved statically, e. g. with a flat seal or an O-ring, thus eliminating the need to use dynamically loaded sealing elements.
As a standard KTR supplies both metallic and non-metallic containment shrouds.
The metallic types cover the widest applications range, yet causing eddy current losses which might require cooling measures.
If eddy current losses can be definitely excluded, the energy-efficient alternative materials PEEK and ceramics are available.




### Use in explosive applications

MINEX® couplings are suitable for power transmission in drives in hazardous locations. The types with metallic and ceramic containment shrouds are certified and confirmed according to EC directive 94/9/EC (ATEX 95) as components of category II and thus suitable for the use in hazardous locations of zone 2G.

Please read through our information included in the respective Type Examination Certificate and the operating and mounting instructions at www.ktr.com.

## Properties of magnetic couplings



| Product | Type with metallic containment shroud | Type with containment shroud made of PEEK | Type with containment shroud made of oxide ceramics |
|---|---|---|---|
| Type | Permanent-magnetic synchronous coupling | | |
| **Properties** | | | |
| Permanent-magnetic | ● | ● | ● |
| Contactless | ● | ● | ● |
| Maintenance-free | ● | ● | ● |
| Torsionally flexible | ● | ● | ● |
| Low vibrations | ● | ● | ● |
| **Special features/applications** | | | |
| | Most common type<br>Covering the widest performance range<br>Particularly suitable for pump drives/ applications with liquids<br>High tmax[°C] and pmax [bar] | No eddy current losses<br>Energy-efficient and economic<br>Particularly suitable for dry running<br>For low demands on tmax [°C] and pmax [bar] | High tmax [°C] and pmax [bar] |
| Torque range TKN [Nm] | | | |
| Max. | 1.000 | 370 | 550 |
| **Max. pressure resistance [bar]** | | | |
| $P_{max.}$ | Up to 90 bar depending on size | Up to 16 bar depending on size | Up to 25 bar depending on size |
| **Geometries** | | | |
| Shaft diameter min. / max. [mm] | 12/90 | 12/90 | 14/90 |
| **Max. temperature resistance [°C]** | | | |
| $t_{max.}$ | 150 / 300 depending on magnet material | 130 | 300 |
| **Certifications/type examinations** | | | |
| ATEX | ● | | ● |
| | For further details see catalogue pages 214 -217 | For further details see catalogue pages 218 -219 | For further details see catalogue pages 220 -221 |

## Torque reduction with temperature increase

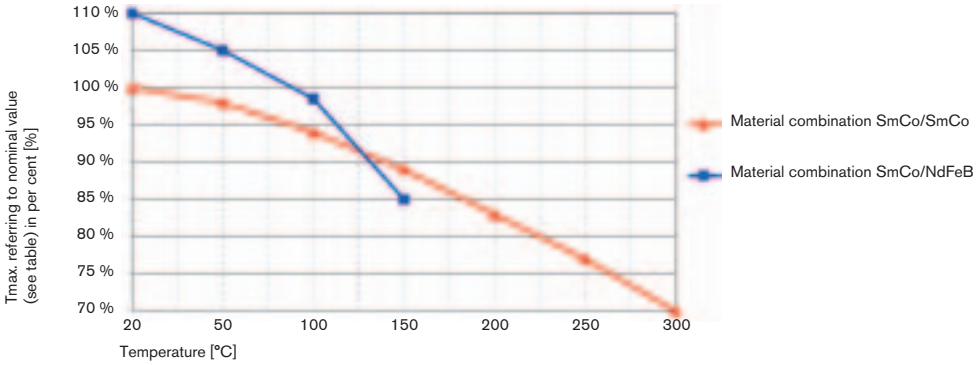


Temporary torque reduction with increased temperature for alternative material combinations [%]

**Please note:**
KTR recommends to use NdFeB magnets for the external rotor, provided that the operating temperature falls below 150 °C.

## Containment shroud – material stainless steel

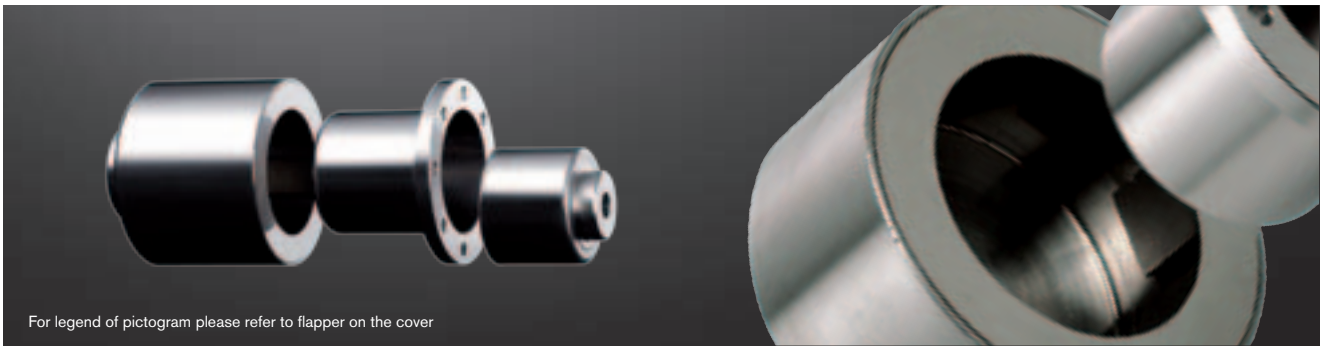


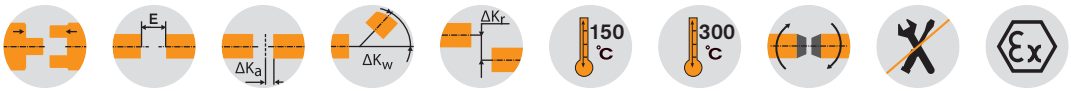


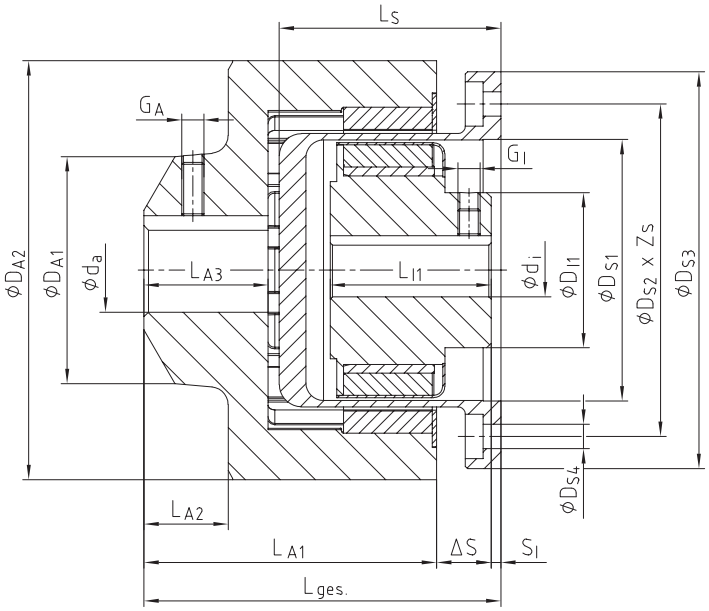


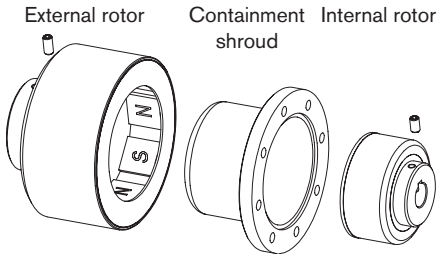


### Technical data – Internal rotor and containment shroud

| Size | TK max. [Nm] with ~ 20 °C | Dimensions [mm] | | | | | | | | | | | | | |
|---|---|---|---|---|---|---|---|---|---|---|---|---|---|---|---|
| | | Internal rotor | | | | | | | Containment shroud | | | | | | |
| | | Finish bore 1) di | | $D_{I1}$ | $L_{I1}$ | GI | $S_I$ | | $D_{S1}$ | $D_{S2}$ | $D_{S3}$ | $D_{S4}$ | $Z_S$ | $L_S$ |
| | | min | max. | | | | min. | max. | | | | | | |
| SA 22/4 | 0,15 | 5 | 9 | 20 | 20 | M3 | 2,0 | 2,0 | 21,5 | 38 | 46 | 4,5 | 8 | 29 |
| SA 34/10 | 1 | 5 | 12 | 20 | 22 | M3 | 2,0 | 5,5 | 34 | 46 | 55 | 4,5 | 4 | 30,5 |
| SA 46/6 | 3 | 8 | 16 | 28 | 33 | M4 | 6,5 | 7,0 | 46 | 64 | 78 | 4,5 | 8 | 45 |
| SA 60/8 | 7 | 12 | 22 | 35 | 36,3 | M5 | 1,7 | 5,5 | 59 | 75 | 89 | 5,5 | 8 | 50 |
| SB 60/8 | 14 | | | 36 | 56 | M5 | 0,0 | 4,0 | | | | | | 70,3 |

### Technical data – External rotor and general

| Size | Dimensions [mm] | | | | | | | | | | |
|---|---|---|---|---|---|---|---|---|---|---|---|
| | External rotor | | | | | | | | General | | |
| | Finish bore 1) da | | $D_{A1}$ | $D_{A2}$ | $G_A$ | $L_{A1}$ | $L_{A2}$ | $L_{A3}$ | ΔS | $L_{total}$ | |
| | min. | max. | | | | | | | | min. | max. |
| SA 22/4 | 5 | 11 | 18 | 38 | M4 | 35 | 8,5 | 11 | 5 | 42 | 42 |
| SA 34/10 | 5 | 14 | 22 | 53 | M4 | 38,8 | 10,5 | 13 | 5,3 | 46 | 49,5 |
| SA 46/6 | 5 | 24 | 40 | 69,5 | M5 | 53 | 16 | 22 | 9 | 69 | 69,5 |
| SA 60/8 | 9 | 32 | 50 | 94,5 | M6 | 66 | 19 | 28 | 12 | 80 | 83,3 |
| SB 60/8 | 9 | 38 | | | M8 | 93,3 | 15 | 30 | | 105,2 | 109,2 |

[1] 1) Bore H7 with keyway to DIN 6885, sheet 1 [JS9]

**Ordering example:**

| MINEX® SA 60/8 | NdFeB | $d_i$ Ø20mm | $d_a$ Ø24mm |
|---|---|---|---|
| Coupling size | NdFeB – $t_{max.}$ = 150 °C<br>Sm2Co17 – $t_{max.}$ = 300 °C | Finish bore (H7), feather keyway acc. to DIN 6885 sheet 1 (JS9) | |

## Examples of application

MINEX® couplings with containment shroud made of stainless steel are the most common type for pump drives and other applications with liquids in the lower performance range. Subject to their high resistance to pressure and temperature they cover a wide application range. The magnetic rotors are available from stock in an unbored or pilot bored design. If requested, the parts can be finish bored according to ISO fit H7 with feather keyway to DIN 6885, sheet 1- JS9.
Inside the rotating magnetic field metallic containment shrouds generally cause losses of eddy current which are converted into heat and which may require cooling measures. On applications with pumps the heat produced can basically be dissipated by the medium to be pumped. If higher pressure resistance than covered by the KTR standard is required, KTR provide for customized special solutions.

Typical applications: gear pumps, centrifugal pumps, screw spindle pumps, agitators, PU foaming lines.

## Use in explosive applications

MINEX® couplings with containment shroud made of stainless steel are suitable for power transmission in drives in hazardous locations. They are certified and confirmed according to EC directive 94/9/EC (ATEX 95) as components of category II and thus suitable for the use in hazardous locations of zone 2G.

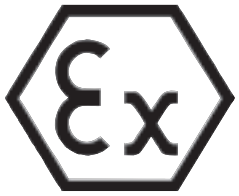


II 2G c IIC T X

If the couplings operate in hazardous locations, the user has to provide for special measures. Please read through our information included in the respective Type Examination Certificate and the operating and mounting instructions at www.ktr.com.

**Technical data – Materials, temperature and pressure resistance**

| Size | $T_{K\ max.}$ [Nm] with 20 °C | Internal rotor | | | Containment shroud | | | External rotor (+ optional flange hub) | | |
|---|---|---|---|---|---|---|---|---|---|---|
| | | Standard material | | Max. temperature | Standard material | | Max. pressure | Standard material | | Max. temperature |
| | | Hub | Magnets | $t_{max.}$ [°C] | Hub | Cont. shroud | $P_N/P_{max.}$ [bar] | Hub | Magnets | $t_{max.}$ [°C] |
| SA 22/4 | 0,15 | 1.4462 | NdFeB | 150 | 1.4571 | 1.4571 | 60/90 | S355J2G3 | NdFeB | 150 |
| SA 34/10 | 1 | 1.4462 | NdFeB | 150 | 1.4571 | 1.4571 | 16/24 | S355J2G3 | NdFeB | 150 |
| SA 46/6 | 3 | 1.4571 | Sm2Co17 | 300 | 1.4571 | 1.4571 | 16/24 | S355J2G3 | Sm2Co17 | 300 |
| SA 60/8 | 7 | 1.4571 | Sm2Co17 | 300 | 1.4571 | 1.4571 | 40/60 | S355J2G3 | Sm2Co17* | 300 |
| SB 60/8 | 14 | 1.4571 | Sm2Co17 | 300 | 1.4571 | 1.4571 | 40/60 | S355J2G3 | Sm2Co17* | 300 |

*) External rotor alternatively available with magnets made of NdFeB ($t_{max.}$=150°C)

## Containment shroud – material Hastelloy

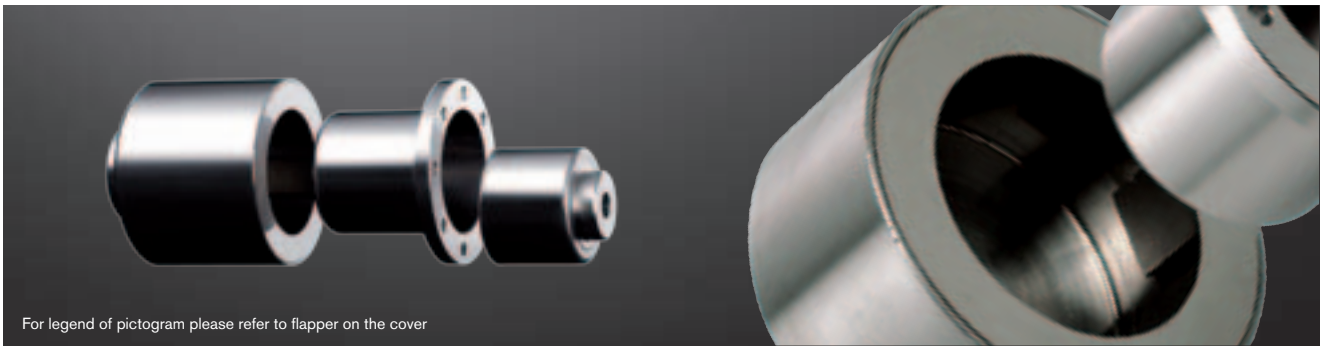


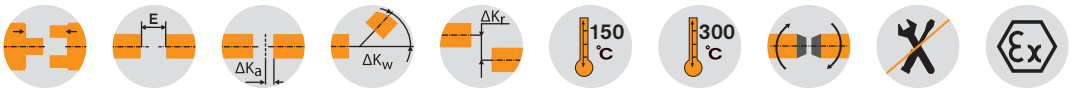


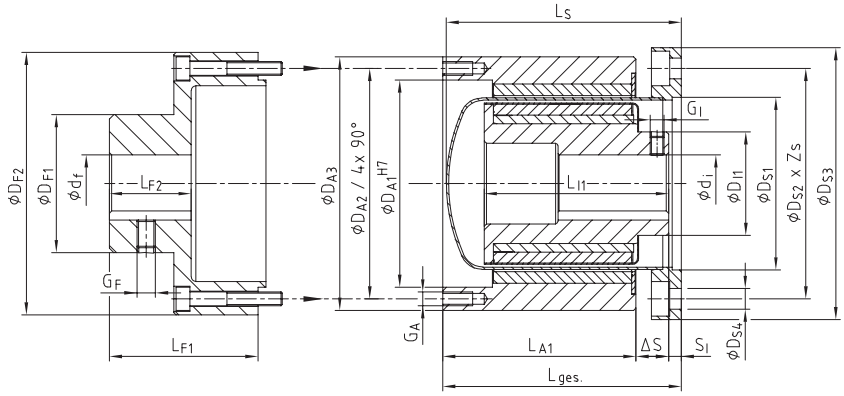


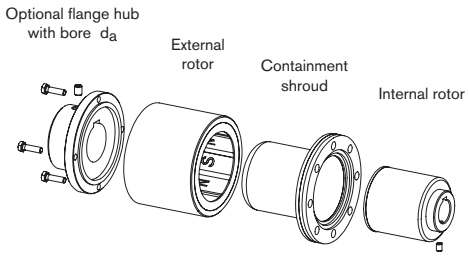


**Technical data – Materials, temperature and pressure resistance**

| Size | TK max. [Nm] with 20 °C | Internal rotor | | | Containment shroud | | | External rotor (+ optional flange hub) | | |
|---|---|---|---|---|---|---|---|---|---|---|
| | | Standard material | | Max. temperature | Standard material | | Max. pressure | Standard material | | Max. temperature |
| | | Hub | Magnets | tmax. [°C] | Hub | Cont. shroud | PN/Pmax. [bar] | Hub | Magnets | tmax. [°C] |
| SA 75/10 | 10 | 1.4571 | Sm2Co17 | 300 | 1.4571 | 2.4602** | 25/37,5 | S355J2G3 | Sm2Co17* | 300 |
| SB 75/10 | 24 | 1.4571 | Sm2Co17 | 300 | 1.4571 | 2.4602** | 25/37,5 | S355J2G3 | Sm2Co17* | 300 |
| SC 75/10 | 40 | 1.4571 | Sm2Co17 | 300 | 1.4571 | 2.4602** | 25/37,5 | S355J2G3 | Sm2Co17* | 300 |
| SA 110/16 | 25 | 1.4571 | Sm2Co17 | 300 | 1.4571 | 2.4856 | 25/37,5 | S355J2G3 | Sm2Co17* | 300 |
| SB 110/16 | 60 | 1.4571 | Sm2Co17 | 300 | 1.4571 | 2.4856 | 25/37,5 | S355J2G3 | Sm2Co17* | 300 |
| SC 110/16 | 95 | 1.4571 | Sm2Co17 | 300 | 1.4571 | 2.4856 | 25/37,5 | S355J2G3 | Sm2Co17* | 300 |
| SB 135/20 | 100 | 1.4571 | Sm2Co17 | 300 | 1.4571 | 2.4856 | 25/37,5 | S355J2G3 | Sm2Co17* | 300 |
| SC 135/20 | 145 | 1.4571 | Sm2Co17 | 300 | 1.4571 | 2.4856 | 25/37,5 | S355J2G3 | Sm2Co17* | 300 |
| SD 135/20 | 200 | 1.4571 | Sm2Co17 | 300 | 1.4571 | 2.4856 | 25/37,5 | S355J2G3 | Sm2Co17* | 300 |
| SC 165/24 | 210 | 1.4571 | Sm2Co17 | 300 | 1.4571 | 2.4856 | 25/37,5 | S355J2G3 | Sm2Co17 | 300 |
| SD 165/24 | 280 | 1.4571 | Sm2Co17 | 300 | 1.4571 | 2.4856 | 25/37,5 | S355J2G3 | Sm2Co17 | 300 |
| SE 165/24 | 370 | 1.4571 | Sm2Co17 | 300 | 1.4571 | 2.4856 | 25/37,5 | S355J2G3 | Sm2Co17 | 300 |
| SD 200/30 | 430 | 1.4571 | Sm2Co17 | 300 | 1.4571 | 2.4856 | 16/24 | S355J2G3 | Sm2Co17 | 300 |
| SE 200/30 | 550 | 1.4571 | Sm2Co17 | 300 | 1.4571 | 2.4856 | 16/24 | S355J2G3 | Sm2Co17 | 300 |
| SD 250/38 | 670 | 1.4571 | Sm2Co17 | 300 | 1.4571 | 2.4856 | 16/24 | S355J2G3 | Sm2Co17 | 300 |
| SE 250/38 | 820 | 1.4571 | Sm2Co17 | 300 | 1.4571 | 2.4856 | 16/24 | S355J2G3 | Sm2Co17 | 300 |
| SF 250/38 | 1000 | 1.4571 | Sm2Co17 | 300 | 1.4571 | 2.4856 | 16/24 | S355J2G3 | Sm2Co17 | 300 |

*) External rotor alternatively available with magnets made of NdFeB ($t_{max.}$ = 150°)
**) Containment shroud size 75 alternatively available made of stainless steel 1.4571 ($P_N/P_{MAX}$ = 16/24 bar)

**Ordering example:**

| MINEX® SB 75/10 | NdFeB | di Ø20mm | da Ø24mm | Hastelloy |
|---|---|---|---|---|
| Coupling size | NdFeB – tmax. = 150 °C<br>Sm2Co17 – tmax. = 300 °C | Finish bore (H7), feather keyway acc. to DIN 6885 sheet 1 (JS9) | | Containment shroud type stainl. steel 1.4571 or Hastelloy |

## Examples of application

MINEX® couplings with containment shroud made of Hastelloy are the most common type for pump drives and other applications with liquids in the average and higher performance range. Subject to their high resistance to pressure and temperature they cover a wide application range.
Inside the rotating magnetic field metallic containment shrouds generally cause losses of eddy current which are converted into heat and which may require cooling measures. On applications with pumps the heat produced can basically be dissipated by the medium to be pumped. If higher pressure resistance than covered by the KTR standard is required, KTR provide for customized special solutions.

Typical applications: gear pumps, centrifugal pumps, screw spindle pumps, agitators, PU foaming lines.

## Use in explosive applications

MINEX® couplings with containment shroud made of stainless steel are suitable for power transmission in drives in hazardous locations. They are certified and confirmed according to EC directive 94/9/EC (ATEX 95) as components of category II and thus suitable for the use in hazardous locations of zone 2G.




II 2G c IIC T X

If the couplings operate in hazardous locations, the user has to provide for special measures. Please read through our information included in the respective Type Examination Certificate and the operating and mounting instructions at www.ktr.com.

**Technical data – External rotor and general**

| Size | Dimensions [mm] | | | | | | | | | | | | | | | | | | | | | | | | | | | | | |
|---|---|---|---|---|---|---|---|---|---|---|---|---|---|---|---|---|---|---|---|---|---|---|---|---|---|---|---|---|---|---|
| | Internal rotor | | | | | | | Containment shroud | | | | | | External rotor | | | | | Flange hub | | | | | | General | | | | | |
| | Finish bore 1) | | $D_{I1}$ | $L_{I1}$ | $G_I$ | $S_I$ | | $D_{S1}$ | $D_{S2}$ | $D_{S3}$ | $D_{S4}$ | $Z_S$ | $L_S$ | $D_{A1}$ | $D_{A2}$ | $D_{A3}$ | $L_{A1}$ | $G_A$ | $d_{f\ max.}$ | $D_{F1}$ | $D_{F2}$ | $L_{F1}$ | $L_{F2}$ | $G_F$ | $\Delta S$ | Total length2) w. flange hub | | | | | |
| | $d_{i\ min.}$ | $d_{i\ max.}$ | | | | min. | max. | | | | | | | | | | | | | | | | | | | min. | max. | | | |
| SA 75/10 | | | | 39,5 | | | 46,5 | | | | | | | | | | 41,3 | | | | | | | | 12,2 | 140 | 164,5 | | | |
| SB 75/10 | 12 | 32 | 45 | 58 | M6 | 4 | 26,5 | 75 | 100 | 118 | 9 | 8 | 102 | 90 | 100 | 110 | 61,3 | M6 | 42 | 60 | 114 | 64,5 | 35,5 | M8 | | 142 | | | | |
| SC 75/10 | | | | 80 | | | 4,0 | | | | | | | | | | 83,8 | | | | | | | | 14,2 | 166,5 | 166,5 | | | |
| SA 110/16 | | | | 45 | | | 55,0 | | | | | | | | | | 41,3 | | | | | | | | | 177,5 | | | | |
| SB 110/16 | 14 | 55 | 80 | 65 | M8 | 4 | 35,0 | 110 | 133 | 153 | 9 | 12 | 115 | 126 | 135 | 145 | 61,3 | M6 | 55 | 85 | 150 | 99,5 | 59,5 | M10 | 18,7 | 183,5 | 214,5 | | | |
| SC 110/16 | | | | 85 | | | 15,0 | | | | | | | | | | 81,3 | | | | | | | | | 203.5 | | | | |
| SB 135/20 | | | | 65 | | | 50,5 | | | | | | | | | | 70,3 | | | | | | | | 18,2 | 190,5 | 204,5 | | | |
| SC 135/20 | 20 | 70 | 90 | 85 | M10 | 4 | 30,5 | 135 | 158 | 178 | 9 | 16 | 139 | 150 | 160 | 170 | 90,3 | M6 | 70 | 100 | 170 | 65,5 | 48,5 | M12 | | | | | | |
| SD 135/20 | | | | 110 | | | 8,0 | | | | | | | | | | 110,3 | | | | | | | | 20,7 | 200,5 | | | | |
| SC 165/24 | | | | 85 | | | 61,5 | | | | | | | | | | 90,3 | | | | | | | | 18,2 | 233 | | | | |
| SD 165/24 | 24 | 80 | 110 | 110 | M12 | 6 | 39,0 | 163,5 | 192 | 218 | 11 | 12 | 170 | 180 | 188 | 198 | 110,3 | M6 | 75 | 110 | 198 | 77 | 60 | M16 | 20,7 | | 247 | | | |
| SE 165/24 | | | | 130 | | | 19,0 | | | | | | | | | | 130,3 | | | | | | | | | 234 | | | | |
| SD 200/30 | | | | 135 | | | 24,0 | | | | | | | | | | 130,3 | | | | | | | | | | | | | |
| SE 200/30 | 38 | 90 | 130 | | M16 | 6 | | 200 | 252 | 278 | 11 | 12 | 180 | 212 | 222 | 232 | | M6 | 80 | 120 | 232 | 120 | 98 | M12 | 25,7 | 282 | 300 | | | |
| SD 250/38 | | | | 115 | | | 46,0 | | | | | | | | | | 110,3 | | | | | | | | | 282 | | | | |
| SE 250/38 | 38 | 100 | 165 | 135 | M16 | 6 | 26,0 | 255 | 285 | 315 | 13,5 | 12 | 182 | 272 | 282 | 292 | 130,3 | M6 | 100 | 150 | 300 | 140 | 93 | M16 | 25,7 | 302 | 322 | | | |
| SF 250/38 | | | | 155 | | | 6,0 | | | | | | | | | | 150,3 | | | | | | | | | 322 | | | | |

[1] 1) Bore H7 with keyway to DIN 6885, sheet 1 (JS9)
[2] * Total length excl. flange hub = LS

## Containment shroud – material PEEK

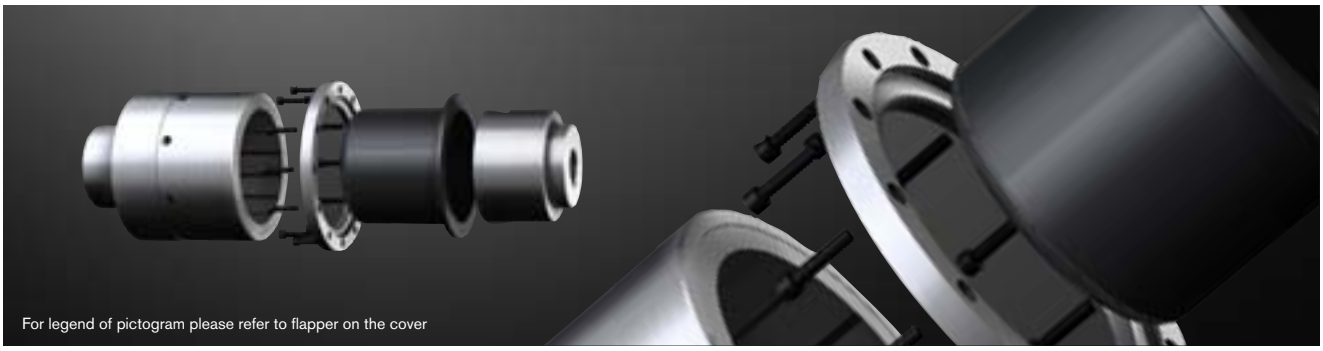


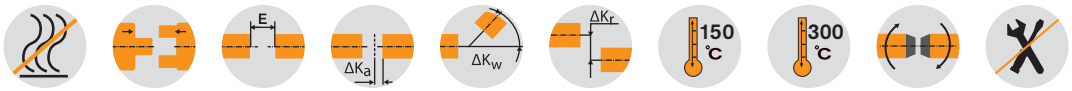


### Technical data – Internal rotor and containment shroud

| Size | TK max. [Nm] with ~ 20 °C | Dimensions [mm] | | | | | | | | | | | | |
|---|---|---|---|---|---|---|---|---|---|---|---|---|---|---|
| | | Internal rotor | | | | | | | Containment shroud | | | | | |
| | | Finish bore 1) di | | $D_{I1}$ | $L_{I1}$ | $G_I$ | $S_I$ | | $D_{S1}$ | $D_{S2}$ | $D_{S3}$ | $D_{S4}$ | $Z_S$ | $L_S = L_{total}$ |
| | | min. | max. | | | | min. | max. | | | | | | |
| SA 75/10 | 10 | | | | 39,5 | | 8,5 | 54,5 | | | | | | 108 |
| SB 75/10 | 24 | 12 | 32 | 45 | 58 | M6 | | 34,5 | 99,9 | 115 | 135 | 9 | 8 | |
| SC 75/10 | 40 | | | | 80 | | 5,5 | 10,0 | | | | | | |
| SA 110/16 | 30 | | | | 45 | | | 46,0 | | | | | | 115 |
| SB 110/16 | 70 | 14 | 55 | 80 | 65 | M8 | 4 | 26,0 | 140 | 151 | 168 | 9 | 12 | |
| SC 110/16 | 100 | | | | 85 | | | 6,0 | | | | | | |
| SB 135/20 | 110 | | | | 65 | | | 48,0 | | | | | | 144 |
| SC 135/20 | 155 | 20 | 70 | 90 | 85 | M10 | 4 | 28,0 | 157 | 167 | 180 | 5,5 | 12 | |
| SD 135/20 | 210 | | | | 110 | | | 4,0 | | | | | | |
| SC 165/24 | 220 | | | | 85 | | 4 | 32,0 | | | | | | 156 |
| SD 165/24 | 300 | 24 | 80 | 110 | 110 | M12 | | 8,0 | 196 | 210 | 225 | 6,6 | 12 | |
| SE 165/24 | 390 | | | | 130 | | -5 | -5,0 | | | | | | 165 |

### Technical data – External rotor, flange hub and general

| Size | Dimensions [mm] | | | | | | | | | | | | | |
|---|---|---|---|---|---|---|---|---|---|---|---|---|---|---|
| | External rotor | | | | | Flange hub | | | | | | General | | |
| | $D_{A1}$ | $D_{A2}$ | $D_{A3}$ | $L_{A1}$ | $G_A$ | Max. finish bore 1) $d_f$ | $D_{F1}$ | $D_{F2}$ | $L_{F1}$ | $L_{F2}$ | $G_F$ | $\Delta S$ | Total length* (incl. flange hub) | |
| | | | | | | | | | | | | | min. | max. |
| SA 75/10 | | | | 41,3 | | | | | | | | 12,2 | 148,5 | 172,5 |
| SB 75/10 | 90 | 100 | 110 | 61,3 | M6 | 42 | 60 | 114 | 64,5 | 35,5 | M8 | | 148,5 | 172,5 |
| SC 75/10 | | | | 83,8 | | | | | | | | 14,2 | 168 | 172,5 |
| SA 110/16 | | | | 41,3 | | | | | | | | | 165,5 | 193,5 |
| SB 110/16 | 130 | 138 | 150 | 61,3 | M6 | 55 | 85 | 153 | 87,5 | 45,5 | M10 | 18,7 | 172,5 | 193,5 |
| SC 110/16 | | | | 81,3 | | | | | | | | | 191,5 | 193,5 |
| SB 135/20 | | | | 70,3 | | | | | | | | 18,2 | 216 | 225,5 |
| SC 135/20 | 158 | 167 | 176 | 90,3 | M6 | 70 | 100 | 176 | 89 | 67 | M12 | | 216 | 225,5 |
| SD 135/20 | | | | 110,3 | | | | | | | | 20,7 | 224 | 224 |
| SC 165/24 | | | | 90,3 | | | | | | | | 18,5 | 231 | 234,8 |
| SD 165/24 | 186 | 195 | 204 | 110,3 | M6 | 75 | 110 | 204 | 94 | 70 | M16 | 21 | 231 | 233,3 |
| SE 165/24 | | | | 130,3 | | | | | | | | | 254,3 | 254,3 |

1) 1) Bore H7 with keyway to DIN 6885, sheet 1 [JS9]

### Technical data

| Size | TK max. [Nm] with 20 °C | Internal rotor | | Containment shroud | | | | External rotor (+ optional flange hub) | |
|---|---|---|---|---|---|---|---|---|---|
| | | Standard material | | Standard material | | Max. pressure | Max. temperature | Standard material | |
| | | Hub | Magnets | Hub | Cont. shroud | $P_N/P_{max.}$ [bar] | $t_{max.}$ [°C] | Hub | Magnets |
| SA 75/10 | 10 | 1.4571 | Sm2Co17 | Aluminium | PEEK | s. Tabelle | s. Tabelle | S355J2G3 | NdFeB |
| SB 75/10 | 24 | 1.4571 | Sm2Co17 | Aluminium | PEEK | s. Tabelle | s. Tabelle | S355J2G3 | NdFeB |
| SC 75/10 | 40 | 1.4571 | Sm2Co17 | Aluminium | PEEK | s. Tabelle | s. Tabelle | S355J2G3 | NdFeB |
| SA 110/16 | 30 | 1.4571 | Sm2Co17 | Aluminium | PEEK | s. Tabelle | s. Tabelle | S355J2G3 | NdFeB |
| SB 110/16 | 70 | 1.4571 | Sm2Co17 | Aluminium | PEEK | s. Tabelle | s. Tabelle | S355J2G3 | NdFeB |
| SC 110/16 | 100 | 1.4571 | Sm2Co17 | Aluminium | PEEK | s. Tabelle | s. Tabelle | S355J2G3 | NdFeB |
| SB 135/20 | 110 | 1.4571 | Sm2Co17 | Aluminium | PEEK | s. Tabelle | s. Tabelle | S355J2G3 | NdFeB |
| SC 135/20 | 155 | 1.4571 | Sm2Co17 | Aluminium | PEEK | s. Tabelle | s. Tabelle | S355J2G3 | NdFeB |
| SD 135/20 | 210 | 1.4571 | Sm2Co17 | Aluminium | PEEK | s. Tabelle | s. Tabelle | S355J2G3 | NdFeB |
| SC 165/24 | 220 | 1.4571 | Sm2Co17 | Aluminium | PEEK | s. Tabelle | s. Tabelle | S355J2G3 | NdFeB |
| SD 165/24 | 300 | 1.4571 | Sm2Co17 | Aluminium | PEEK | s. Tabelle | s. Tabelle | S355J2G3 | NdFeB |
| SE 165/24 | 390 | 1.4571 | Sm2Co17 | Aluminium | PEEK | s. Tabelle | s. Tabelle | S355J2G3 | NdFeB |

**Ordering example:**

| MINEX® SB 75/10 | NdFeB | $d_i$ Ø20mm | $d_a$ Ø24mm | PEEK |
|---|---|---|---|---|
| Coupling size | NdFeB – tmax. = 150 °C<br>Sm2Co17 – tmax. = 300 °C | Finish bore (H7), feather keyway acc. to DIN 6885 sheet 1 (JS9) | | Containment shroud type |

## Examples of application

MINEX® couplings with containment shroud made of PEEK are an economic, energy-efficient alternative to the types made of metal. They do not generate any eddy current losses and as a result do not generate any heat so that usually expensive cooling measures can be done without. Moreover, they are characterized by low susceptibility to fracture, low weight and easy handling. They are ideally suitable for applications with low demands on temperature and pressure resistance.

Typical applications: vacuum pumps, fan drives, compressors, agitators, PU foaming lines.

## Depending on pressure and temperature resistance

| Temperature [°C] | Perm. nominal/testing pressure | |
|---|---|---|
| | $P_N$ [bar] | $P_{MAX}$ [bar] |
| 40 | 14 | 21 |
| 70 | 13 | 19,5 |
| 100 | 12 | 18 |
| 130 | 10 | 15 |

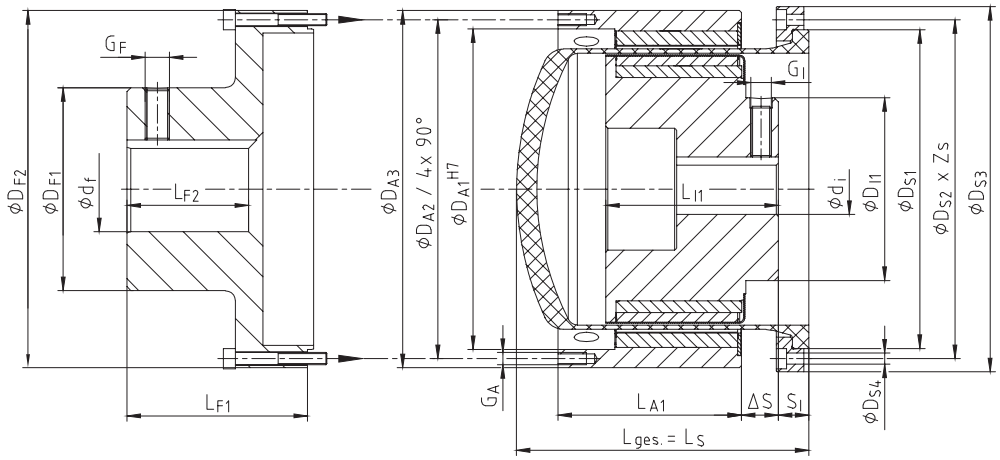


$$S_A = S_I + \Delta S$$

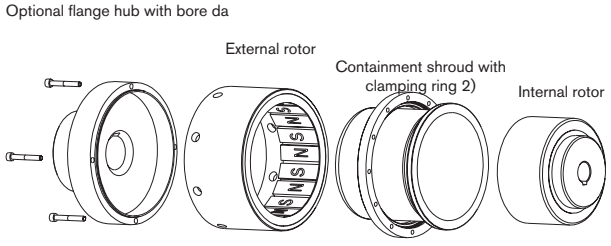


2) Containment shroud size 75 also available as a single-part design!

## Containment shroud – material oxide ceramics

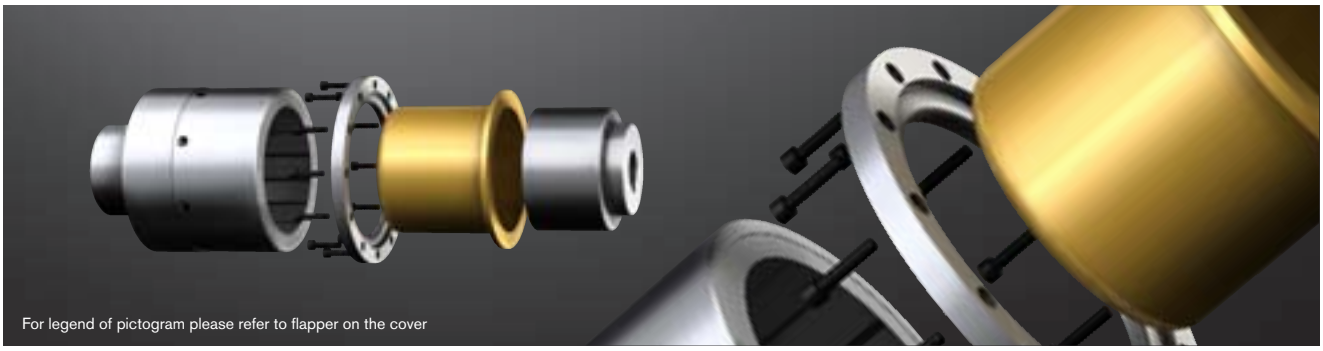





### Technical data – Internal rotor and containment shroud

| Size | TK max. [Nm] with ~ 20 °C | Dimensions [mm] | | | | | | | | | | | | |
|---|---|---|---|---|---|---|---|---|---|---|---|---|---|---|
| | | Internal rotor | | | | | | | Containment shroud | | | | | |
| | | Finish bore 1) $d_i$ | | $D_{I1}$ | $L_{I1}$ | $G_I$ | $S_I$ | | $D_{S1}$ | $D_{S2}$ | $D_{S3}$ | $D_{S4}$ | $Z_S$ | $L_S = L_{total}$ |
| | | min. | max. | | | | min. | max. | | | | | | |
| SA 110/16 | 30 | | | | 45 | | | 48,0 | | | | | | |
| SB 110/16 | 70 | 14 | 55 | 72 | 65 | M8 | 4 | 28,0 | 132 | 151 | 168 | 9 | 12 | 115 |
| SC 110/16 | 100 | | | | 85 | | | 9,0 | | | | | | |
| SB 135/20 | 110 | | | | 65 | | | 46.5 | | | | | | |
| SC 135/20 | 155 | 20 | 70 | 90 | 85 | M10 | 4 | 26,5 | 157 | 167 | 180 | 5,5 | 12 | 143 |
| SD 135/20 | 210 | | | | 110 | | | 4,0 | | | | | | |
| SC 165/24 | 220 | | | | 85 | | | 28,0 | | | | | | 150 |
| SD 165/24 | 300 | 24 | 90 | 110 | 110 | M12 | 4 | 4,0 | 196 | 210 | 225 | 6,6 | 12 | |
| SE 165/24 | 390 | | | | 130 | | | 17,0 | | | | | | 185 |
| SD 200/30 | 430 | 38 | 90 | 130 | 135 | M16 | 4 | 4,0 | 229 | 246 | 265 | 9 | 12 | 185 |
| SE 200/30 | 550 | | | | | | | | | | | | | |

### Technical data – External rotor, flange hub and general

| Size | Dimensions [mm] | | | | | | | | | | | | | |
|---|---|---|---|---|---|---|---|---|---|---|---|---|---|---|
| | External rotor | | | | | Flange hub | | | | | | General | | |
| | $D_{A1}$ | $D_{A2}$ | $D_{A3}$ | $L_{A1}$ | $G_A$ | Max. finish bore 1) df | $D_{F1}$ | $D_{F2}$ | $L_{F1}$ | $L_{F2}$ | $G_F$ | ΔS | Total length* (incl. flange hub) | |
| | | | | | | | | | | | | | min. | max. |
| SA 110/16 | | | | 41,3 | | | | | | | | | 165,5 | 195,5 |
| SB 110/16 | 130 | 138 | 150 | 61,3 | M6 | 55 | 85 | 153 | 87,5 | 45,5 | M10 | 18,7 | 171,5 | 195,5 |
| SC 110/16 | | | | 81,3 | | | | | | | | | 191,5 | 196,5 |
| SB 135/20 | | | | 70,3 | | | | | | | | 18,2 | 215 | 224 |
| SC 135/20 | 158 | 167 | 176 | 90,3 | M6 | 70 | 100 | 176 | 89 | 67 | M12 | | 215 | 224 |
| SD 135/20 | | | | 110,3 | | | | | | | | 20,7 | 220 | 220 |
| SC 165/24 | | | | 90,3 | | | | | | | | 18,5 | 225 | 230,5 |
| SD 165/24 | 186 | 195 | 204 | 110,3 | M6 | 75 | 110 | 204 | 94 | 70 | M16 | 20,7 | 229 | 229 |
| SE 165/24 | | | | 130,3 | | | | | | | | | 260 | 260 |
| SD 200/30 | 220 | 230 | 240 | 130,3 | M6 | 80 | 120 | 240 | 120 | 88 | M16 | 25,7 | 280 | 280 |
| SE 200/30 | | | | | | | | | | | | | | |

* Total length excl. flange hub = LS

### Technical data

| Size | $T_K$ max. [Nm] with 20 °C | Internal rotor | | | Containment shroud | | | External rotor (+ optional flange hub) | | |
|---|---|---|---|---|---|---|---|---|---|---|
| | | Standard material | | Max. temperature | Standard material | | Max. pressure | Standard material | | Max. temperature |
| | | Hub | Magnets | $t_{max.}$ [°C] | Hub | Cont. shroud | $P_N/P_{max.}$ [bar] | Hub | Magnets | $t_{max.}$ [°C] |
| SA 110/16 | 25 | 1.4571 | Sm2Co17 | 300 | Aluminium | ZrO2MgO | 25/37,5 | S355J2G3 | Sm2Co17 | 300 |
| SB 110/16 | 60 | 1.4571 | Sm2Co17 | 300 | Aluminium | ZrO2MgO | 25/37,5 | S355J2G3 | Sm2Co17 | 300 |
| SC 110/16 | 95 | 1.4571 | Sm2Co17 | 300 | Aluminium | ZrO2MgO | 25/37,5 | S355J2G3 | Sm2Co17 | 300 |
| SB 135/20 | 100 | 1.4571 | Sm2Co17 | 300 | Aluminium | ZrO2MgO | 25/37,5 | S355J2G3 | Sm2Co17 | 300 |
| SC 135/20 | 145 | 1.4571 | Sm2Co17 | 300 | Aluminium | ZrO2MgO | 25/37,5 | S355J2G3 | Sm2Co17 | 300 |
| SD 135/20 | 200 | 1.4571 | Sm2Co17 | 300 | Aluminium | ZrO2MgO | 25/37,5 | S355J2G3 | Sm2Co17 | 300 |
| SC 165/24 | 210 | 1.4571 | Sm2Co17 | 300 | Aluminium | ZrO2MgO | 25/37,5 | S355J2G3 | Sm2Co17 | 300 |
| SD 165/24 | 280 | 1.4571 | Sm2Co17 | 300 | Aluminium | ZrO2MgO | 25/37,5 | S355J2G3 | Sm2Co17 | 300 |
| SE 165/24 | 370 | 1.4571 | Sm2Co17 | 300 | Aluminium | ZrO2MgO | 25/37,5 | S355J2G3 | Sm2Co17 | 300 |
| SD 200/30 | 430 | 1.4571 | Sm2Co17 | 300 | Aluminium | ZrO2MgO | 25/37,5 | S355J2G3 | Sm2Co17 | 300 |
| SE 200/30 | 550 | 1.4571 | Sm2Co17 | 300 | Aluminium | ZrO2MgO | 25/37,5 | S355J2G3 | Sm2Co17 | 300 |

**Ordering example:**

| MINEX® SB 135/20 | NdFeB | $d_i$ Ø20mm | $d_a$ Ø24mm | Oxidkeramik $ZrO_2MgO$ |
|---|---|---|---|---|
| Coupling size | NdFeB – tmax. = 150 °C<br>Sm2Co17 – tmax. = 300 °C | Finish bore (H7), feather keyway acc. to DIN 6885 sheet 1 (JS9) | | Containment shroud type |

## Examples of application

Like with the types with containment shroud made of PEEK, MINEX® couplings with containment shroud made of ceramics are an economic, energy-efficient alternative to the types made of metal. Again they do not generate any eddy current losses and as a result do not generate any heat so that usually expensive cooling measures can be done without. Compared to PEEK, the containment shrouds made of ceramics are characterized by higher resistance to pressure and an excellent temperature resistance.

Typical applications: vacuum pumps, fan drives, compressors, agitators, PU foaming lines.

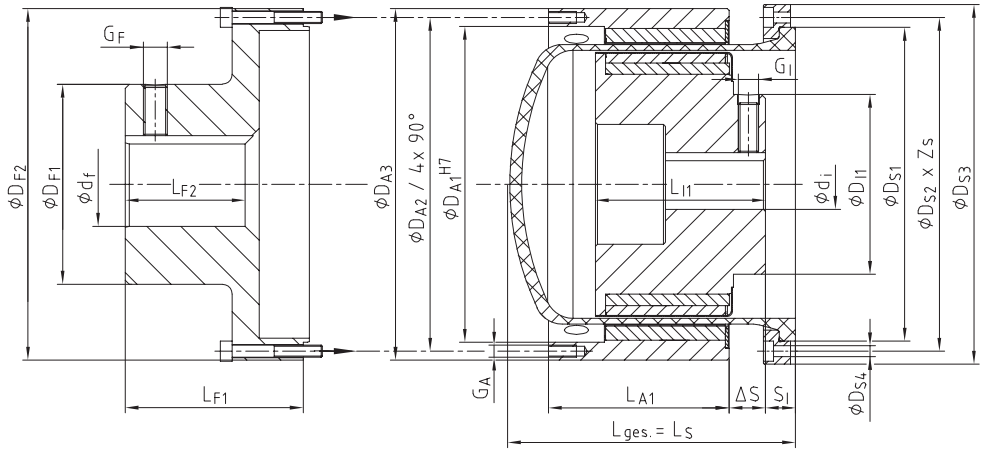


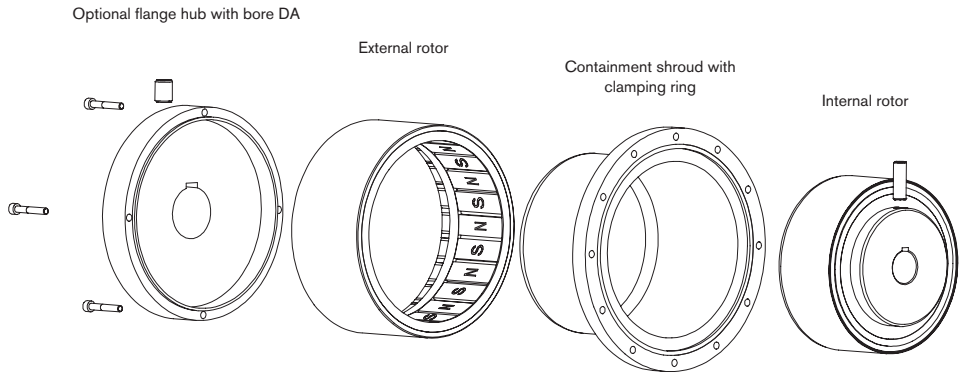


## Use in explosive applications

MINEX® couplings with containment shrouds made of oxide ceramics are suitable for power transmission in drives in hazardous locations. They are certified and confirmed according to EC directive 94/9/EC (ATEX 95) as components of category II and thus suitable for the use in hazardous locations of zone 2G.

Ex II 2G c IIC T X

Please read through our information included in the respective Type Examination Certificate and the operating and mounting instructions at www.ktr.com.

## Conversion kits and customized component assemblies

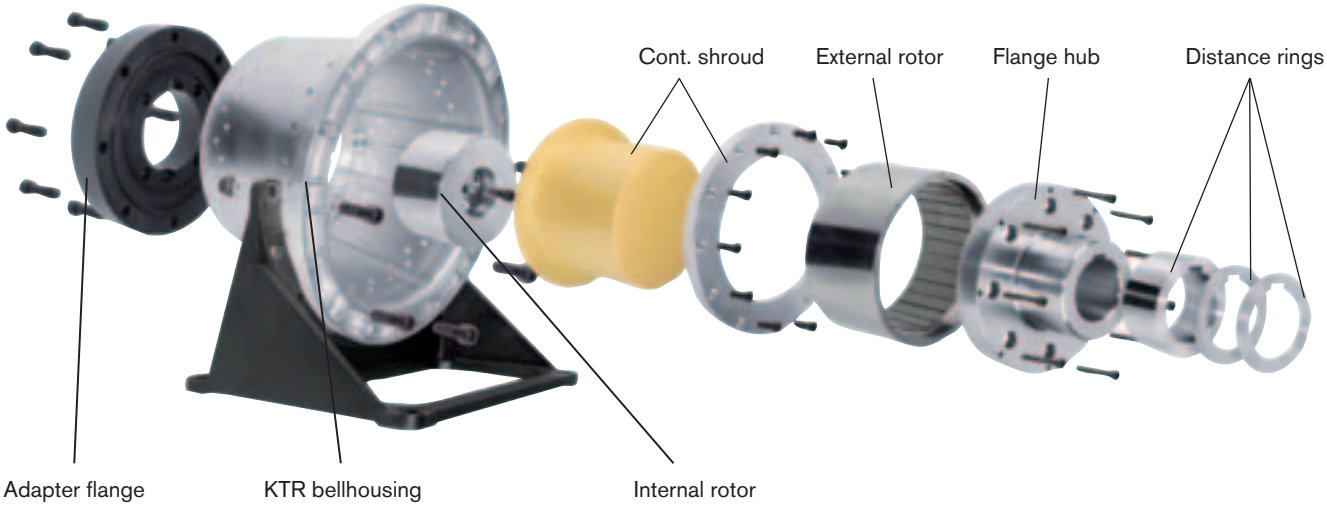


On request KTR can offer customer-specific solutions in combination with hydraulic components from KTR, whereby existing systems can be easily retrofitted with MINEX®-S.

### Conversion kits for PUR foaming processes

Conveying and proportioning the media polyol and isocyanate in the processing plants for PUR, ambient air has to be prevented from penetrating into the process, since otherwise unrequested reactions may be generated.
For a reliable sealing of such drives KTR offers standard conversion kits, among others for axial piston pumps types REXROTH A2VK and ROTARY POWER C series offering the following benefits:

- Maintenance-free operation
- Standstill periods are considerably reduced
- No more problems with sealing
- Better efficiency and process safety

The assemblies are available for all motor-pump-combinations and in various materials.

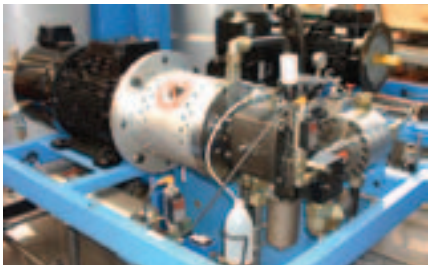

Maintenance-free sealing of dosing pumps for polyde and isocyanate in high-pressure reaction casting machines

| Pump data | | Motor data (4 poles, n=1500 RPM) | | | Coupling data | | |
|---|---|---|---|---|---|---|---|
| Pump | Type | Engine | Power [kW] | Torque $T_N$ | Size | Max. torque $T_{k\ max.}$ | Bellhousing |
| REXROTH A2VK | A2VK-12 | 132 S | 5,5 | 35 Nm | SB 110/16 | 60 Nm | PL 300/13/… |
| | | 132 M | 7,5 | 48 Nm | SC 110/16 | 95 Nm | |
| | | 160 M | 11 | 70 Nm | SC 135/20 | 145 Nm | PL 350/7… |
| | A2VK-28 | 160 M | 11 | 70 Nm | SC 135/20 | 145 Nm | |
| | | 160 L | 15 | 96 Nm | SD 135/20 | 200 Nm | |
| | | 180 M | 18,5 | 118 Nm | SD 135/20 | 200 Nm | |
| | A2VK-55 | 160 L | 15 | 96 Nm | SC 165/24 | 210 Nm | PL 350/7/… |
| | | 180 M | 18,5 | 118 Nm | SC 165/24 | 210 Nm | |
| | | 180 L | 22 | 144 Nm | SD 165/24 | 280 Nm | PL350/7/… |
| | | 200 L | 30 | 196 Nm | SE 165/24 | 280 Nm | PL400/5/… |
| | | 225 S/M | 37/45 | 240/292 Nm | SE 165/24 | 370 Nm | PL450/3/… |
| | A2VK-107 | 225 S/M | 37/45 | 240/292 Nm | SE 165/24 | 370 Nm | PL400/5/… |
| ROTARY POWER C-Range | C 01 | 100L | 2,2 | 14 Nm | SB 75/10 | 24 Nm | PK 250/13/… |
| | C 04 | 132 M | 7,5 | 48 Nm | SC 110/16 | 95 Nm | PL300/13/… |
| | C 07 | 132 S | 5,5 | 35 Nm | SB 110/16 | 60 Nm | PL300/13/… |
| | | 132 M | 7,5 | 48 Nm | SC 110/16 | 95 Nm | PL300/13/… |
| | C20 | 160 L | 15 | 96 Nm | SD 135/20 | 200 Nm | PL 350/7/… |
| | | 180 M | 18,5 | 118 Nm | SD 135/20 | 200 Nm | PL 350/7/… |

## Other types

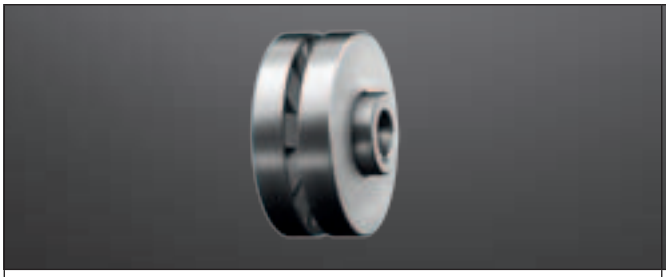

**Disk coupling**
With this type the magnets are arranged opposite to each other in axial direction. This type is beneficial if there is only little axial mounting space and a flat separating wall between the rotors is requested.



**Hysteresis coupling MINEX®-H**
Different from the MINEX®-S magnetic coupling this type switches to slipping operation once the maximum transmittable torque has been achieved, while it continues to transmit $T_{max}$ as a holding torque. Applications: roll conveyors, winder drives, etc.



**MINEX®-S completely made of stainless steel**
If requested, KTR supplies MINEX®-S completely made of stainless steel. Die Magnete des Außenrotors sind dann in gleicher Weise verkapselt wie beim Innenrotor. Anwendungen: Offshore-Bereich, Marine etc.



**MINEX®-S Custom Design**
KTR is able to supply also customer specific design solutions including drive shaft and slide bearings upon request.

Use of MINEX®-S on a small centrifugal pump

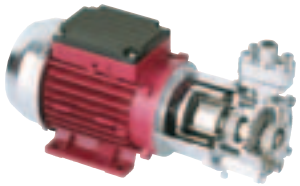

MINEX®-S for sealing homogenizers for heavy oil processing in marine operation

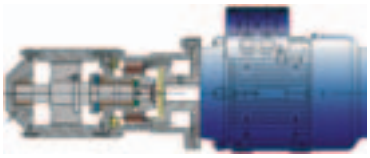

Retrofitting of a gear pump with MINEX® SA 75/10, Bellhousing PK 200/30, foot flange and damping rod



MINEX®-S for sealing of autoclaves (T.B.M. / STERICHEM) in laboratories and hospitals

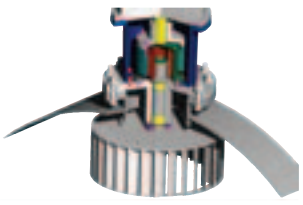

Technical data for coupling selection/selection of components

| | | | |
|---|---|---|---|
| Motor type | _____ | Pump type | _____ |
| Driving power | _____ kW | Speed | _____ 1/min |
| Pressure | _____ bar | Temperature | _____ °C |
| Viscosity of medium | _____ mm²/s | Max. perm. dimensions | _____ ØD x $L_{total}$ |